SL27M plissé

2. technical drawings

comprehensive drawing with component codes

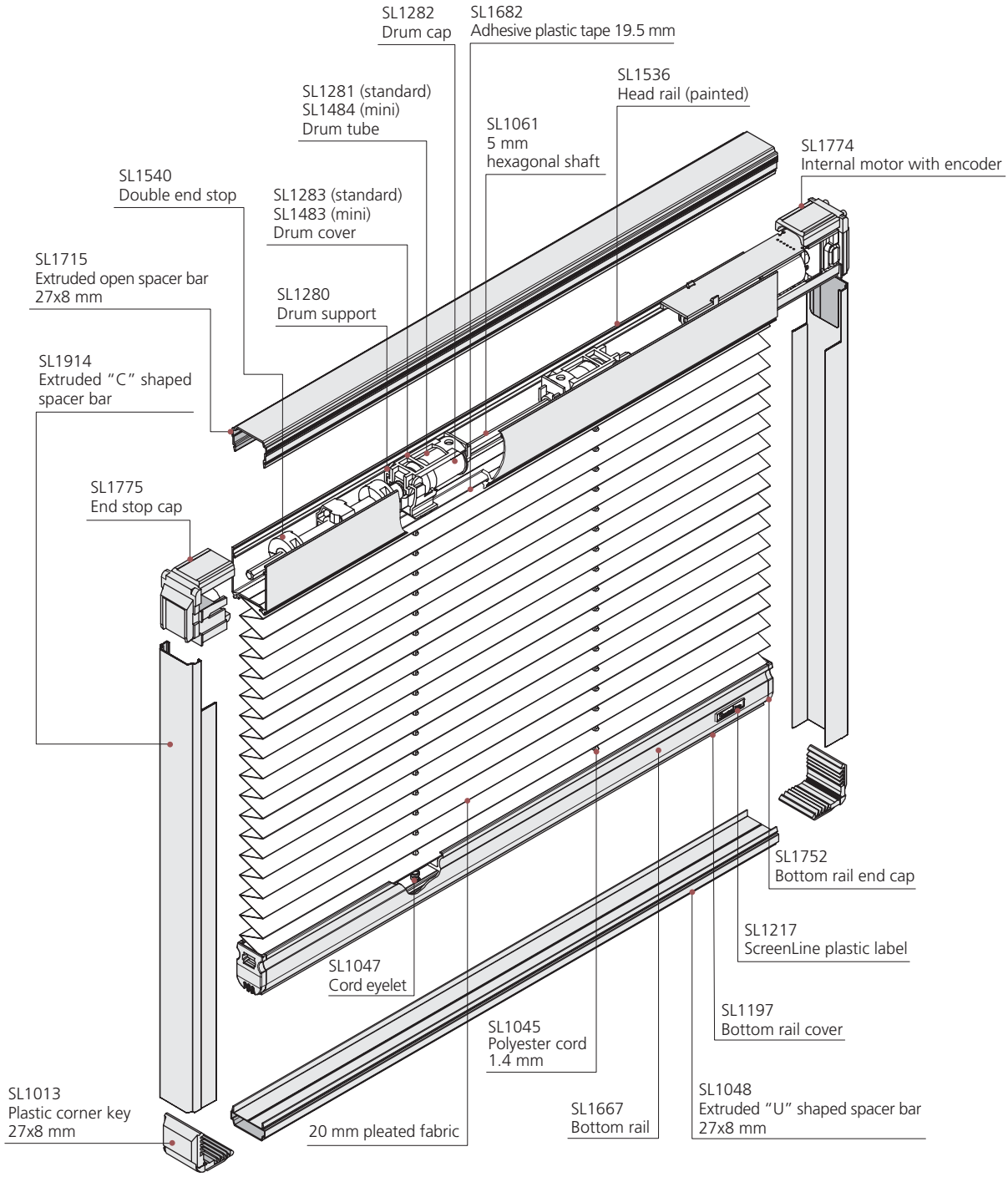

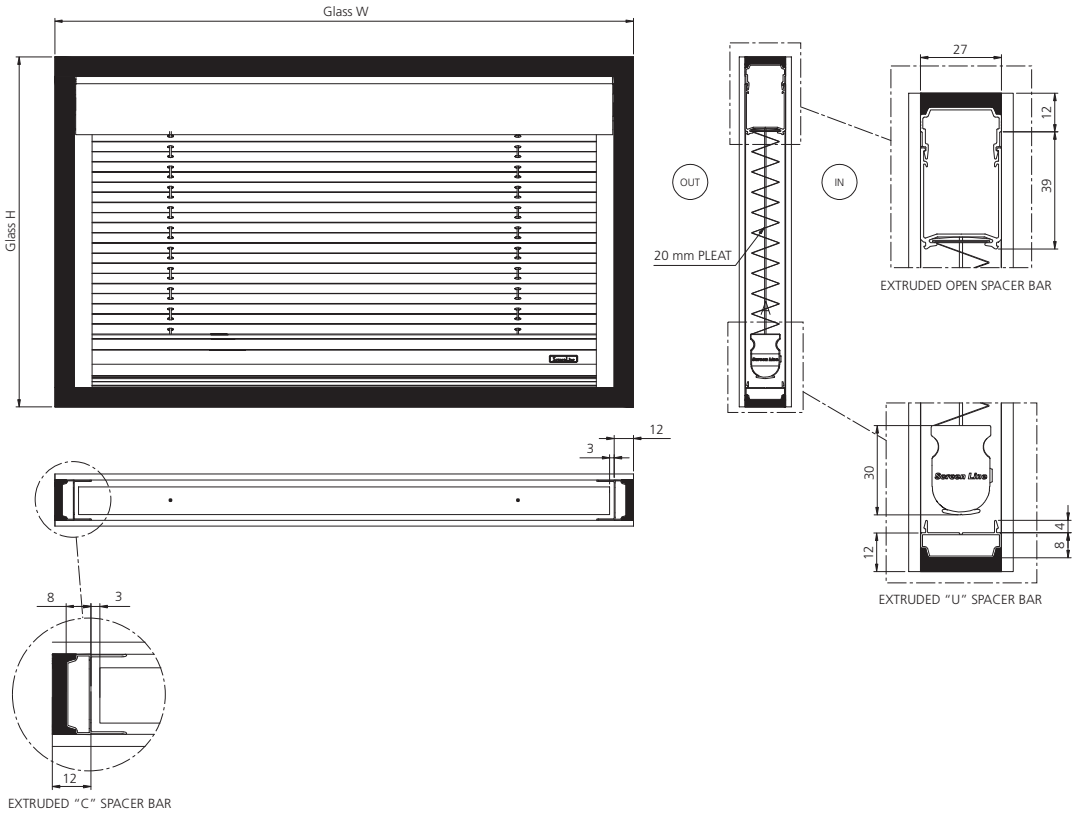
Glass W
Glass H
OUT
IN
20 mm PLEAT
27
12
39
EXTRUDED OPEN SPACER BAR
30
12
4
8
EXTRUDED "U" SPACER BAR
12
3
8
3
12
EXTRUDED "C" SPACER BAR

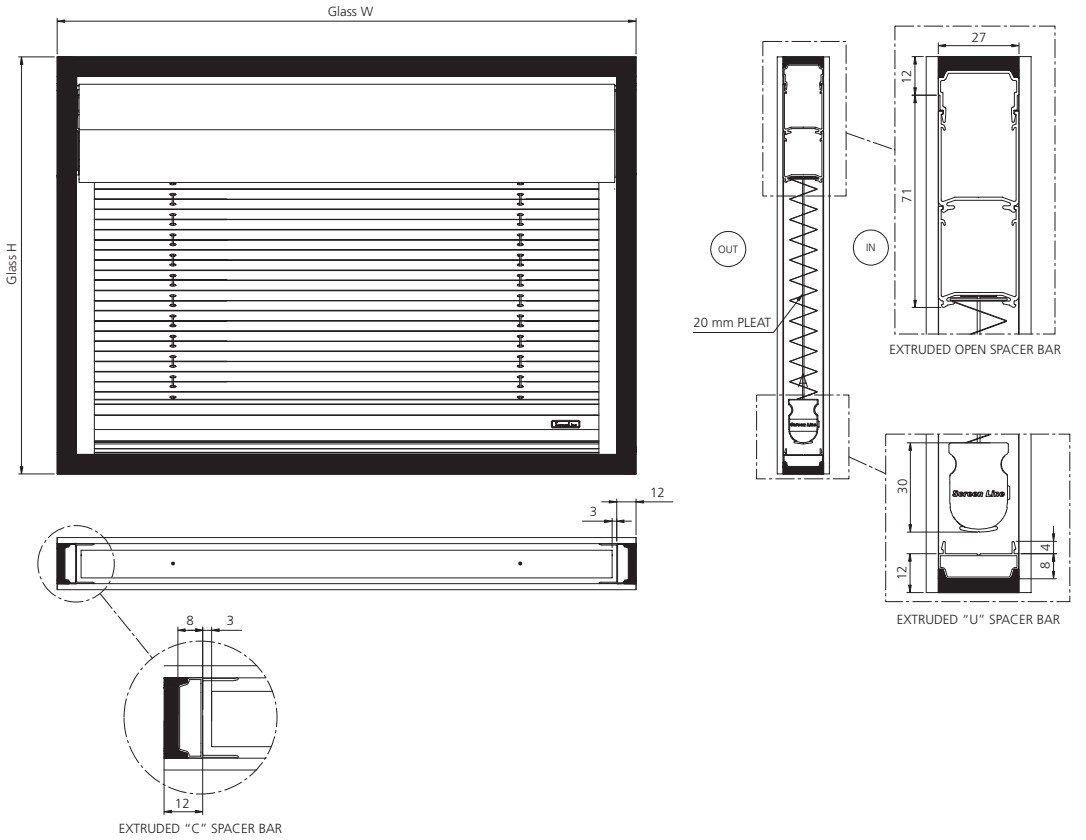
Glass W
Glass H
OUT
IN
20 mm PLEAT
27
12
71
EXTRUDED OPEN SPACER BAR
30
12
4
8
EXTRUDED "U" SPACER BAR
12
3
8
3
12
EXTRUDED "C" SPACER BAR